R-454B Refrigerant

UNICOOL Wall Packaged Units

AIRSYS Variable Speed Precision Cooling with VFD Technology, 7 - 28kW

- Designed specifically for computer and equipment environments, the system provides a cooling capacity optimized for sensible heat removal.
- Features an integrated free-cooling economizer with seamless changeover and optional partial free cooling
- The new Adaptive Free Cooling feature optimizes free cooling for each building by learning and adapting to each building's heat load and layout. automatically adjusting operation to maximize free cooling efficiency.

Infinite Step Variable Capacity Cooling

- Variable Frequency Drive (VFD) technology rated for 11–12 EER (depending on model) at nominal capacity, and >17 IEER.
- New Synchronized Cooling Mode enables any building with redundant units to achieve even higher year-round EER while maintaining full redundancy.
- Soft Start feature eliminates voltages spikes at compressor startup (allowing for a smaller generator) and minimizing compressor stress during every startup cycle.

EER Comparisons

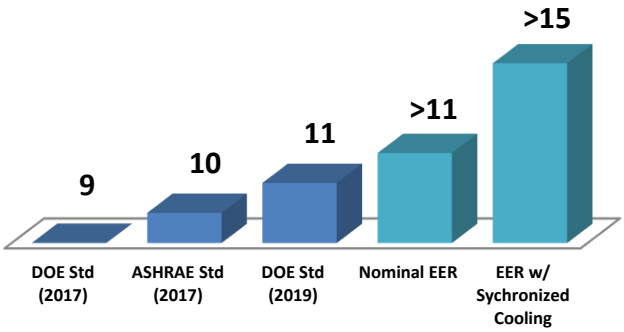

Feature Highlights

Variable Capacity Compressor
Variable Frequency Drive technology enables the compressor to precisely match internal load requirements while minimizing stress associated with ON/OFF cycles.

Integrated Free Cooling Economizer
Standard on all units, the highly configurable economizer provides seamless transitions and variable capacity control, delivering up to 100% of the rated supply fan air volume.

Dual Air Flow Configurations
The bottom supply configuration optimizes efficiency, while the top supply configuration simplifies installation.

Electrically Commutated (EC) Supply Fan
Quieter, more efficient variable speed EC fans are standard across all models, delivering a highly favorable energy efficiency curve compared to conventional AC fans.

Dual Layer Exterior Protection
The galvanized steel exterior, enhanced with a thermoset polymer coating, provides two layers of protection against corrosion.

Extreme Operating Temperature Range
Designed to operate reliably in ambient temperatures ranging from -22°F to 127°F.

Power Monitoring
The Power monitoring feature includes real-time kW measurement as well as 1-hour, 24-hour, and 30-day average power tracking. These metrics can be utilized for predictive maintenance.

Fully Functional Standalone Mode
If communication between the unit and the controller is lost, the HVAC system will continue to operate all functions, including free cooling, mechanical cooling, and heating.

Intertek

AHRI CERTIFIED™ www.ahridirectory.org

AIRSYS Balance the Environment

.

STANDARD FEATURES

Precise Heat Load Match

Just as an airplane experiences its greatest stress during takeoff and landing, the cooling cycles place the highest mechanical stress on the compressor. The startup of a fixed-speed compressor wears down the contactors, and the associated inrush current accelerates wear on other electronic components.

Even with properly sized units and a correctly programmed minimum compressor run/stop timer, loading and unloading can occur up to one hundred times per day—adding up to more than 30,000 cycles per year. By precisely matching the cooling demand, variable-speed units minimize abrupt compressor loading and unloading, significantly extending the service life and reliability of the entire cooling system.

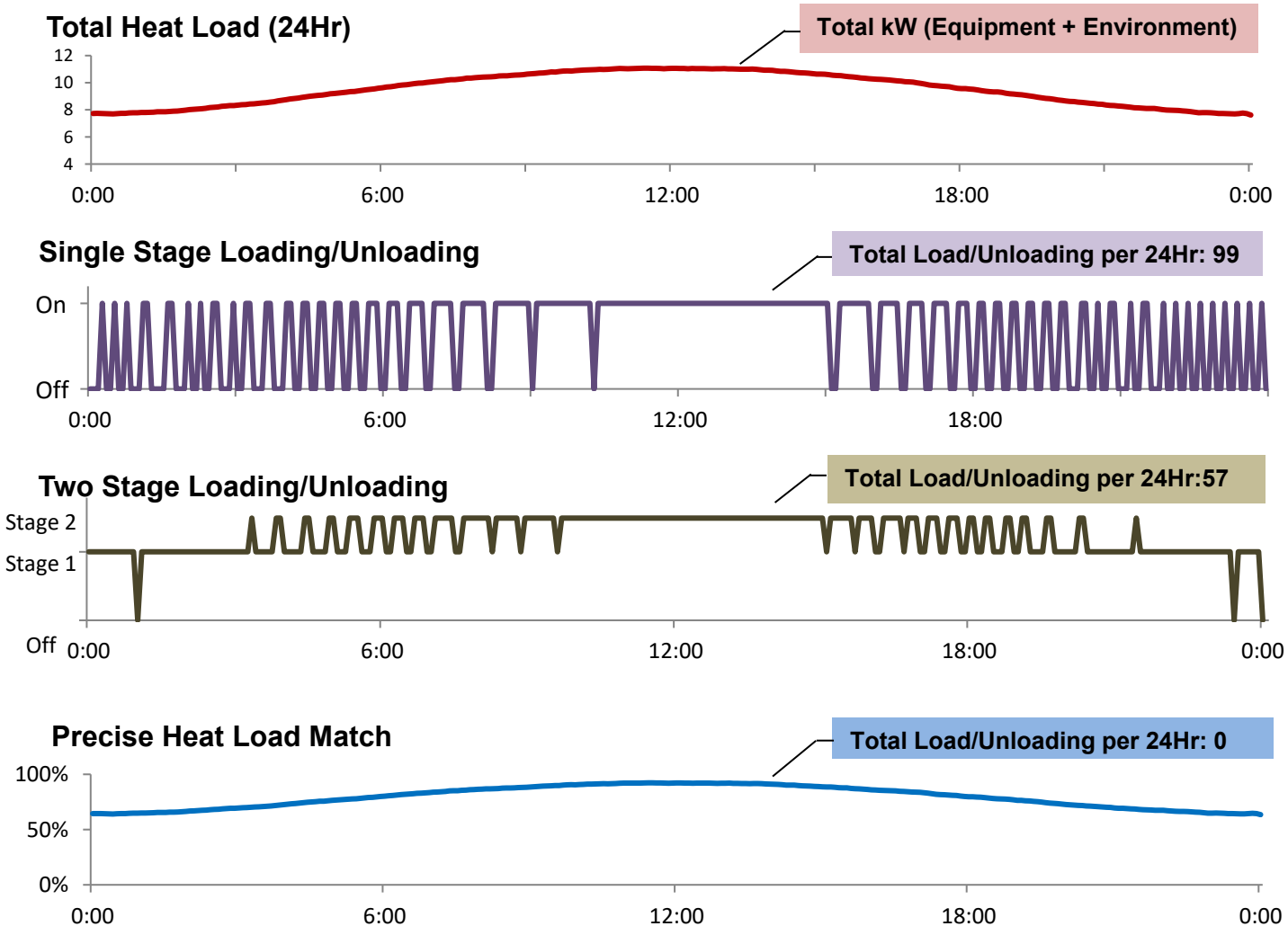

Adaptive Free Cooling

Traditional wall-packaged unit controls typically use a fixed outdoor air temperature threshold to initiate free cooling, based on the indoor setpoint. Depending on the site's heat load, this fixed threshold may not provide optimal performance.

Adaptive free cooling addresses this limitation by automatically learning and retaining the optimal outdoor temperature points at which free cooling becomes viable. The system continuously adjusts these thresholds over time, maximizing free cooling hours without requiring operator intervention. This functionality is particularly valuable when site heat loads fluctuate, as the system adapts to establish new optimal free cooling setpoints dynamically.

Soft Start

Instead of sudden and numerous starts and stops, the compressor gradually ramps up capacity at startup and continuously modulates to match the shelter load. Advantages include:

- Minimizes mechanical stress during compressor startup.
- Eliminates voltage spikes at startup, reducing generator sizing requirements. Generators and transfer switches no longer need to be rated for Locked Rotor Amps, allowing use of smaller, more cost-efficient equipment.
- Reduced noise caused by sudden compressor loading.

Synchronized Cooling Mode

With the Variable Capacity systems, buildings equipped with one or more redundant HVAC units can utilize Synchronized Cooling Mode. In this mode, all available units operate at low speed rather than relying on a single lead unit to handle the entire load. For example, in a building with two units in a lead/lag configuration, instead of running the lead unit at 90% capacity, synchronized cooling will operate both units at 45% capacity. At partial load, efficiency is significantly higher, while compressor stress and noise are reduced to one-fourth. Redundancy remains intact: if one unit experiences a mechanical cooling failure, the other unit will ramp up to full capacity to maintain site temperature. This operating mode enables any building with redundant units to consistently achieve a high efficiency.

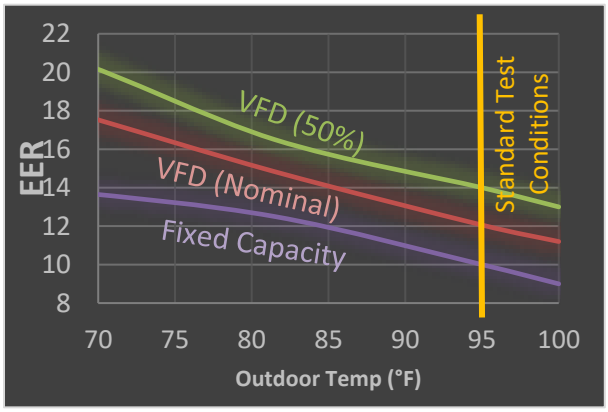

Turbo Boost Mode

In certain conditions, such as extremely high outdoor temperatures or sudden increases in internal heat load, the building's cooling demand may exceed the nominal capacity of the HVAC system. When this occurs, Turbo Boost Mode can automatically engage to deliver up to 125% of the system's nominal cooling capacity. This provides temporary additional cooling at the expense of a slight reduction in overall efficiency.

Quiet Mode

Quiet mode reduces operating noise by 10–14 dBA by limiting the maximum compressor frequency. When Quiet Mode is enabled, maximum cooling capacity is reduced by 15%, and Turbo Boost is disabled. This feature is ideal for noise-sensitive environments.

Fully Functional Standalone Mode

The system can operate in a fully functional Standalone Mode when communication is lost between the HVAC system and the central controller. This includes maintaining free cooling, mechanical cooling, dehumidification, and heating operation. This capability eliminates the controller as a single point of failure for the HVAC system.

Standard Features

Multi-Unit ASMUC.6 Controller

The Variable Capacity WPU is designed to operate with AIRSYS Multi-Unit Controller (ASMUC), which can control up to 6 units and up to 16 units when equipped with an extension module simultaneously. The controller can set up to 4 distinct control zones, each with their own temperature settings.

The ASMUC provides an overview page that displays the real-time operating status of all connected HVAC units. Detailed statuses of each temperature and pressure measurement are available directly on the controller, enabling accurate monitoring and efficient troubleshooting. All parameters are also accessible remotely through IP/SNMP, allowing both monitoring and adjustment of setpoints and other critical control parameters.

Settings are retained during power loss. Each unit also includes a Programmable Graphical Display (PGD) identical to the main controller function. If communication is lost, each unit operates independently using the last received settings and its onboard temperature and humidity sensors.

For local service, the ASMUC includes a micro-USB port for on-site software updates and for downloading alarm logs to a personal computer.

Performance Parameter Readout

The system provides real-time performance parameter readouts via the local controller display and remote monitoring interface. This functionality enables qualified personnel to quickly assess system operating conditions, reducing diagnostic and maintenance time. When integrated with remote monitoring, this feature supports predictive maintenance strategies, reducing maintenance costs and enhancing overall system reliability.

Typical monitored parameters include:

- Superheat
- Subcooling
- EEV Status
- Variable Compressor Capacity
- Discharge Pressure (High Pressure)
- Discharge Temperature
- Suction Pressure (Low Pressure)
- Suction Temperature

Power monitoring

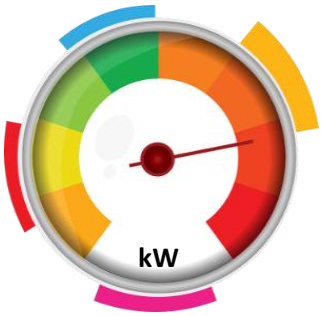

- All variable capacity systems come with power monitoring tools that are displayed locally in addition to being available via remote access. This measurement includes instantaneous power consumption as well as 1-hour, 24-hour and 30-day average power consumption for each of the HVAC units. Power monitoring can be used to measure efficiencies across systems, regions, and networks, and can be used for predictive maintenance.

Standard Features

Condenser Heat Exchange Meter

The ability to reject heat through the condenser coil is a critical factor in HVAC system performance. Monitoring heat exchange efficiency at the condenser coil enables intelligent maintenance decisions. Whether caused by small leaves and sticks obstructing airflow or by dirt and grime accumulating on coil fins, the precision cooling system can indicate to the end user or service technician exactly how much heat exchange efficiency has been lost.

Air Filter Protection Device

The patented AIRSYS AFPD (Air Filter Protection Device) is field-proven and specifically engineered to protect air filters from excessive dust and debris loading. In environments such as sites near dirt roads, highways, farmland, or other sources of airborne particulates, the AFPD optimizes free cooling during periods of cleaner outdoor air. This extends the service life of the primary air filter while reducing maintenance costs. The result is improved energy efficiency and enhanced system reliability.

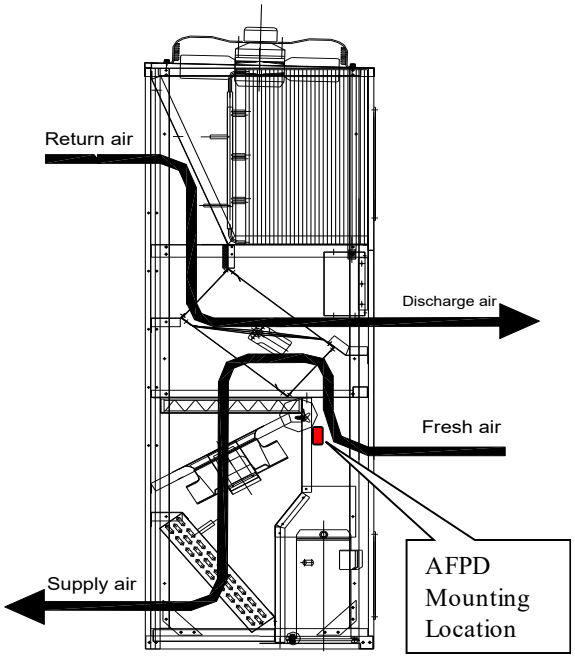

MODEL NUMBER NOMENCLATURE

1	2	3	4	5	6	7	8	9	10	11	12	13
11	V	1	T3	M	R454	A	AC	.	X	X	X	X

1	11	**Nominal kW** Total Cooling Capacity
2	V	**Compressor Type** V: Variable Capacity E: Fixed Capacity Scroll R: Fixed Capacity Rotary
3	1	**Compressor Qty** 1: 1 Variable Compressor 2: 1 Variable Compressor + 1 Fixed Compressor
4	T3	**Mechanical Package Code** B: Bottom Supply Package T: Top Supply Package The number following “B" or “T” denotes package size. See mechanical drawing for detail.
5	M	**Design Control Configuration** M: Designed for Multiple Unit Controller S: Single Controller with PGD
6	R454	**Refrigerant** R454: R454B Refrigerant
7	A	**Primary Power Supply** A: 208/230V1PH 60Hz B: 208/230V3PH 60Hz C: 460V 3PH 60Hz D: 380V 3PH 50Hz
8	AC	**Supply Fan Power** AC: AC Powered EC Fan DC: DC Powered EC Fan
9	.	Separator Character “. “
10	X	**Custom Color Options** X: Mesa Tan (Default) G: Light Gray W: White B: Matte Black
11	X	**Custom Coating Options** X: Polyurethane Coated Panel and Frame + Coated Evaporator Coil (Default) C: Default + Blygold Condenser Coil Coating+ Stainless Steel Fasteners E: Option C + Stainless Steel Panel and Frame P: Option X + Epoxy Coating for Condenser Fin Coil
12	X	**Custom Filters Options** X: MERV8 (Default) 1: MERV 11 (F5) 2: MERV 13 (F7)
13	X	**Custom Heater options** X: Standard heater 0: No heater

NOMINAL COOLING PERFORMANCE (AHRI 390)

Model	Nominal Tonnage	Nominal Total Capacity	EER	IEER
7V1B2MR454AAC	1 - 2.5 Ton Variable	7.2 kW / 24,400 BTUH	11.4	20.0
11V1B3MR454AAC	2 - 4 Ton Variable	10.4 kW / 35,400 BTUH	11.5	20.0
11V1B3MR454ADC	2 - 4 Ton Variable	10.4 kW / 35,400 BTUH	11.5	18.5
11V1T3MR454AAC	2 - 4 Ton Variable	10.4 kW / 35,400 BTUH	11.0	18.5
15V1B4MR454AAC	3 - 6 Ton Variable	15.1 kW / 51,500 BTUH	11.5	20.0
15V1B4MR454BAC	3 - 6 Ton Variable	15.1 kW / 51,500 BTUH	11.5	20.0
15V1B4MR454CAC	3 - 6 Ton Variable	15.1 kW / 51,500 BTUH	11.4	20.0
15V1B4MR454CDC	3 - 6 Ton Variable	15.1 kW / 51,500 BTUH	11.2	20.0
15V1T4MR454AAC	3 - 6 Ton Variable	15.1 kW / 51,500 BTUH	11.2	18.5
15V1T4MR454BAC	3 - 6 Ton Variable	15.1 kW / 51,500 BTUH	11.2	18.5
28V2B5MR454AAC	3 - 10 Ton Variable	28.1 kW / 96,000 BTUH	10.5	19.0
28V1B5MR454BAC	4 - 10 Ton Variable	28.1 kW / 96,000 BTUH	11.5	20.0
28V1B5MR454CAC	4 - 10 Ton Variable	28.1 kW / 96,000 BTUH	11.0	20.0

NOTE: All capacities, EER, and IEER values are certified in accordance with AHRI Standard 390.

NOMINAL COOLING PERFORMANCE (ASHRAE 127)

Model	Nominal Sensible Capacity	SCOP
7V1B2MR454AAC	5.5 kW/ 18,800 BTUH	3.39
11V1B3MR454AAC	8.2 kW / 28,000 BTUH	3.53
11V1B3MR454ADC	8.2 kW / 28,000 BTUH	3.53
11V1T3MR454AAC	8.0 kW / 27,300 BTUH	3.41
15V1B4MR454AAC	12.0 kW / 41,000 BTUH	3.32
15V1B4MR454BAC	12.0 kW / 41,000 BTUH	3.33
15V1B4MR454CAC	11.8 kW / 40,200 BTUH	3.49
15V1B4MR454CDC	11.8 kW / 40,200 BTUH	3.49
15V1T4MR454AAC	12.0 kW/ 41,000 BTUH	3.28
15V1T4MR454BAC	12.5 kW/ 42,500 BTUH	3.29
28V2B5MR454AAC	22.0 kW/ 75,100 BTUH	3.17
28V1B5MR454BAC	21.7 kW / 74,000 BTUH	3.20
28V1B5MR454CAC	21.7 kW / 74,000 BTUH	3.20

- Capacities and SCOP are rated as the ASHRAE 127 standard for air-cooled units.
- All data are analyzed and tested based on standard ratings at 95°F outdoor temperature and 80°F/67°F indoor return temperature under DB/WB conditions.

VARIABLE SPEED COMPRESSOR CAPACITY DATA

Model	Return Temp. (DB/WB)	Min Total Capacity		Max Total Capacity		Min Sensible Capacity		Max Sensible Capacity	
		kW	BTUH	kW	BTUH	kW	BTUH	kW	BTUH
7V1B2MR454AAC	80/67°F	4.1	14,000	8.6	29,400	3.0	10,200	7.5	25,600
	86/69°F	4.2	14,300	8.9	30,400	3.0	10,200	8.6	29,400
	95/72°F	4.4	15,000	9.4	32,100	3.5	11,900	9.5	32,400
11V1B3MR454AAC	80/67°F	4.3	14,700	12.6	43,000	3.3	11,300	10.0	34,100
	86/69°F	4.4	15,000	13.0	44,400	3.4	11,600	11.5	39,200
	95/72°F	4.7	16,000	13.8	47,100	3.9	13,300	13.0	44,400
11V1B3MR454ADC	80/67°F	4.1	14,000	12.5	42,700	3.1	10,600	9.6	32,800
	86/69°F	4.3	14,700	12.9	44,000	3.2	10,900	11.0	37,500
	95/72°F	4.5	15,300	13.7	46,700	3.3	11,300	12.5	42,600
11V1T3MR454AAC	80/67°F	4.2	14,300	12.6	43,000	3.6	12,300	10.2	34,800
	86/69°F	4.4	15,000	13.0	44,400	3.7	12,600	11.7	39,900
	95/72°F	4.6	15,700	13.8	47,100	3.8	13,000	13.3	45,400
15V1B4MR454AAC	80/67°F	7.8	26,600	18.2	62,100	5.8	19,800	15.3	52,200
	86/69°F	7.9	27,000	18.6	63,500	5.9	20,100	15.9	54,300
	95/72°F	8.2	28,000	19.6	66,900	6.8	23,200	18.6	63,500
15V1B4MR454BAC	80/67°F	7.8	26,600	18.2	62,100	5.8	19,800	15.3	52,200
	86/69°F	7.9	27,000	18.6	63,500	5.9	20,100	15.9	54,300
	95/72°F	8.2	28,000	19.6	66,900	6.8	23,200	18.6	63,500
15V1B4MR454CAC	80/67°F	8.4	28,700	18.3	62,400	5.5	18,800	14.9	50,900
	86/69°F	8.6	29,300	18.7	63,800	5.6	19,100	15.5	52,900
	95/72°F	8.9	30,300	19.7	67,200	6.5	22,200	18.2	62,100
15V1B4MR454CDC	80/67°F	8.0	27,300	18.2	62,100	6.3	21,500	13.6	46,400
	86/69°F	8.2	28,000	18.6	63,500	6.4	21,800	14.2	48,500
	95/72°F	8.5	29,000	19.6	67,000	7.4	25,300	16.6	56,700
15V1T4MR454AAC	80/67°F	7.3	24,900	17.7	60,400	5.4	18,400	14.8	50,500
	86/69°F	7.4	25,200	18.1	61,800	5.5	18,800	15.4	52,300
	95/72°F	7.7	26,300	19.1	65,200	6.3	21,500	18.0	61,400
15V1T4MR454BAC	80/67°F	9.5	32,500	18.1	61,800	8.2	28,000	13.9	47,500
	86/69°F	9.6	32,700	18.5	63,200	8.4	28,700	14.4	49,300
	95/72°F	10.0	34,200	19.5	66,600	9.2	31,400	17.1	58,400
28V2B5MR454AAC	80/67°F	9.5	32,400	33.1	113,000	8.3	28,300	28.3	96,600
	86/69°F	9.8	33,400	34.3	117,000	8.5	29,000	30.2	103,000
	95/72°F	10.3	35,100	36.2	124,000	9.7	33,100	34.5	118,000
28V1B5MR454BAC	80/67°F	9.5	32,400	34.2	117,000	8.4	28,700	29.0	99,000
	86/69°F	9.8	33,400	35.4	121,000	9.7	33,100	33.2	113,000
	95/72°F	10.3	35,100	37.4	128,000	11.0	37,500	37.7	129,000
28V1B5MR454CAC	80/67°F	12.1	41,300	33.6	115,000	10.2	34,800	28.5	97,300
	86/69°F	12.5	42,700	34.8	119,000	10.3	35,200	32.6	111,000
	95/72°F	13.1	44,700	36.8	126,000	11.7	39,900	37.2	127,000

- All Data all given at 95°F outdoor temperature. For outdoor temperatures higher than 95°, de-rate capacity by 4% for every 5°F above 95°F, up to 120°F.
- For high altitude installation, de-rate capacity by approximately 1% for every 1000 ft above 1000ft. Contact manufacturer for installations above 6500ft.

Free Cooling Capacity

Model	ΔT = 5°F		ΔT = 10°F		ΔT = 15°F		ΔT = 20°F	
	kW	BTUH	kW	BTUH	kW	BTUH	kW	BTUH
7V1B2MR454AAC	1.8	6100	3.6	12200	5.4	18300	7.2	24500
11V1B3MR454AAC	2.5	8500	5.0	17000	7.5	25500	10.0	34100
11V1B3MR454ADC	2.5	8500	5.0	17000	7.5	25500	10.0	34100
11V1T3MR454AAC	2.8	9500	5.6	19000	8.4	28500	15.6	38100
15V1B4MR454AAC	4.1	14000	8.2	28000	12.3	42000	15.7	55900
15V1B4MR454BAC	3.9	13400	7.9	26800	11.8	40200	16.3	53700
15V1B4MR454CAC	4.1	13900	8.2	27800	12.2	41700	11.3	55600
15V1B4MR454CDC	3.6	12300	7.2	24600	10.8	36900	11.3	49100
15V1T4MR454AAC	4.1	14000	8.2	28000	12.3	42000	17.6	55900
15V1T4MR454BAC	4.1	14000	8.2	28000	12.3	42000	17.7	55900
28V2B5MR454AAC	7.5	25500	15.0	51000	22.4	76500	30.1	101900
28V1B5MR454BAC	7.5	25500	15.0	51000	22.4	76500	30.1	101900
28V1B5MR454CAC	10.5	35700	20.9	71400	31.4	107100	37.2	142600

Airflow Ratings

Model	Under Wet Coil and dry Coil Conditions （CFM）							
	0.0 in. w.c. (0Pa)		0.1 in. w.c. (25Pa)		0.2 in. w.c. (50Pa)		0.3 in. w.c. (75Pa)	
7V1B2MR454AAC	2,100	2125	2060	2080	2020	2040	1980	2000
11V1B3MR454AAC	2,500	2525	2450	2470	2400	2420	2350	2370
11V1B3MR454ADC	2,900	2925	2840	2870	2780	2810	2720	2750
11V1T3MR454AAC	2,800	2825	2740	2770	2690	2710	2640	2660
15V1B4MR454AAC	4,100	4125	3980	4000	3860	3880	3740	3760
15V1B4MR454BAC	4,000	4025	3880	3900	3760	3780	3650	3670
15V1B4MR454CAC	4,100	4125	3980	4000	3860	3880	3740	3760
15V1B4MR454CDC	3,600	3625	3490	3520	3390	3410	3290	3310
15V1T4MR454AAC	4,100	4125	3980	4000	3860	3880	3740	3760
15V1T4MR454BAC	2,100	2125	2020	2040	1940	1960	1860	1880
28V2B5MR454AAC	7,500	7525	7200	7220	6910	6930	6630	6650
28V1B5MR454BAC	7990	8115	7690	7710	7420	7440	7130	7150
28V1B5MR454CAC	8,650	8675	8220	8240	7810	7830	7420	7440

Technical Details

Model	Compressor	Evaporator Fan		Condenser Fan		Electric Heater		Refrigerant	Noise (3)	
	Current (A) (1)	Current (A) (1)	Air Volume (CFM) (2)	Current (A) (1)	Air Volume (CFM) (2)	Capacity (kW)	Current (A)	Weight (lbs)	Nominal (dB)	Quiet Mode
7V1B2MR454AAC	11.5	1.5	2,100	2.5	7,500	6	26.1	4.9	63	54
11V1B3MR454AAC	15.7	1.7	2,500	3.3	7,800	6	26.1	7.1	65	56
11V1B3MR454ADC	16.5	8.5	2,900	3.1	7,500	6	26.1	7.1	65	56
11V1T3MR454AAC	16.5	1.8	2,800	2.5	7,000	6	26.1	10.1	66	56
15V1B4MR454AAC	20.9	4	4,100	3.3	7,800	6	26.1	8.8	65	56
15V1B4MR454BAC	12.6	3.8	4,000	3.3	7,800	6	15.2	8.8	65	57
15V1B4MR454CAC	6.3	3.9	4,100	1.2	8,400	6	7.5	8.8	65	56
15V1B4MR454CDC	20.9	3.3	4,100	2.7	8,400	6	26.1	11	66	56
15V1T4MR454AAC	19.6	3.3	4,100	2.7	8,400	6	26.1	11	66	56
15V1T4MR454BAC	8.7	1.2	2,100	1.1	3,800	6	26.1	4.9	63	54
28V2B5MR454AAC	22.2/15.3	6.3	7,500	6.5	17,000	6	26.1	11.2/11.7	68	62
28V1B5MR454BAC	24.3	6.3	7,990	6.5	17,000	6	15.2	14.7	67	57
28V1B5MR454CAC	12	3.2	8,650	2.4	17,000	6	7.5	14.7	67	57

(1) All electric current values are given at rated capacity for safety, not at the potential maximum.
(2) All air volume values are given at max capacity for continuous operation, and the units are equipped with standard pleated filters
(3) Ambient Temperature: 95°F, 6.5 ft away from unit in open space.

Electrical Ratings

Model	Circuit #1				Circuit #2			
	AC or DC		48 VDC		AC or DC		48 VDC	
	MCA	MFS	MCA	MFS	MCA	MFS	MCA	MFS
7V1B2MR454AAC	34.1	35	--	--	--	--	--	--
11V1B3MR454AAC	34.7	40	--	--	--	--	--	--
11V1B3MR454ADC	32.6	40	10.6	15	--	--	--	--
11V1T3MR454AAC	34.8	40	--	--	--	--	--	--
15V1B4MR454AAC	37.6	50	--	--	--	--	--	--
15V1B4MR454BAC	24.5	35	--	--	--	--	--	--
15V1B4MR454CAC	14.3	15	--	--	--	--	--	--
15V1B4MR454CDC	12.6	15	10.9	15	--	--	--	--
15V1T4MR454AAC	36.7	50	--	--	--	--	--	--
15V1T4MR454BAC	35.4	45	--	--	--	--	--	--
28V2B5MR454AAC	43.8	60	--	--	32.6	35	--	--
28V1B5MR454BAC	26.8	30	--	--	30.4	50	--	--
28V1B5MR454CAC	22.1	30	--	--	--	--	--	--

MCA = Minimum Circuit Ampacity
MFS = Maximum Fuse Size (or HACR Breaker if it meets the same maximum current limit)

Filter Sizes

Model	Filter Quantity	Nominal Size (in)	Exact Size (in)
7V1B2MR454AAC	1	18 x 25 x 2	17-1/2 x 24-1/2 x 1-3/4
11V1B3MR454AAC	2	16 x 16 x 2	15-1/2 x 15-1/2 x 1-3/4
11V1B3MR454ADC	2	16 x 16 x 2	15-1/2 x 15-1/2 x 1-3/4
11V1T3MR454AAC	2	16 x 16 x 4	15-7/8 x 15-7/8 x 3-3/4
15V1B4MR454AAC	2	20 x 22 x 2	19-7/8 x 21-7/8 x 1-3/4
15V1B4MR454BAC	2	20 x 22 x 2	19-7/8 x 21-7/8 x 1-3/4
15V1B4MR454CAC	2	20 x 22 x 2	19-7/8 x 21-7/8 x 1-3/4
15V1B4MR454CDC	2	20 x 22 x 2	19-7/8 x 21-7/8 x 1-3/4
15V1T4MR454AAC	2	20 x 22 x 2	19-7/8 x 21-7/8 x 1-3/4
15V1T4MR454BAC	2	18 x 20 x 4	17-7/8 x 21-7/8 x 1-3/4
28V2B5MR454AAC	3	16 x 24 x 4	15-1/2 x 23-1/2 x 3-3/4
28V1B5MR454BAC	2	25 x 25 x 4	25 x 24-3/8 x 3-3/4
28V1B5MR454CAC	2	25 x 25 x 4	25 x 24-3/8 x 3-314

DIMENSIONS

MODEL: 7V1B2

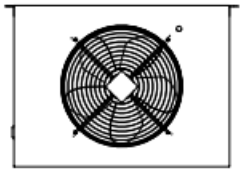

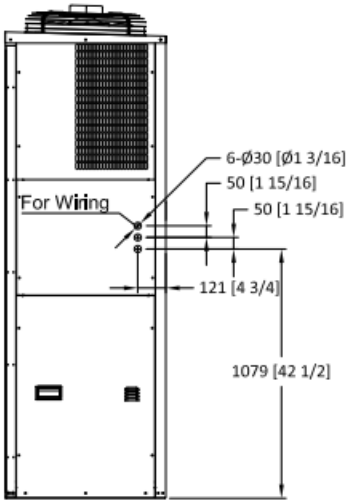

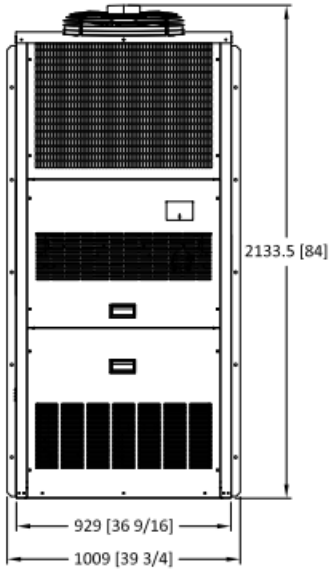

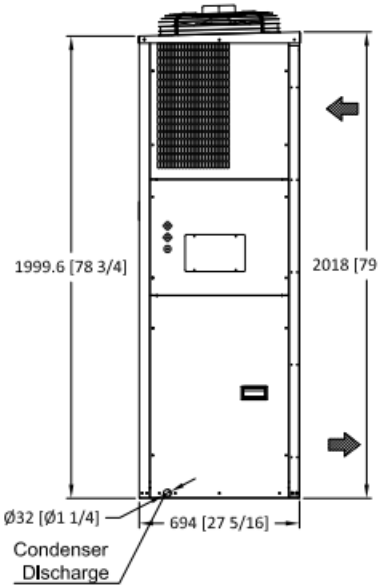

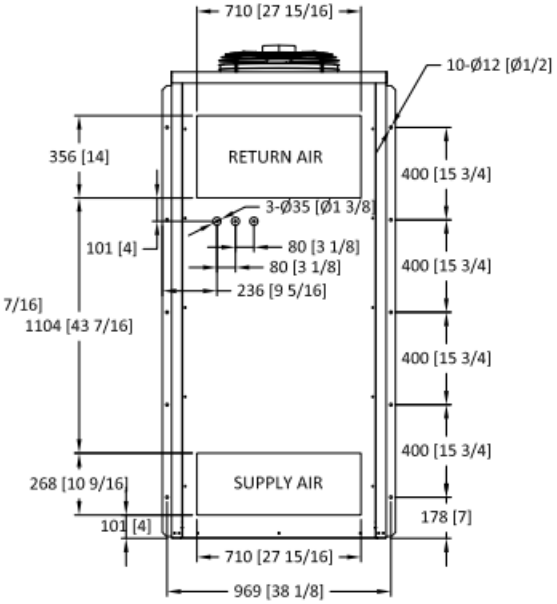

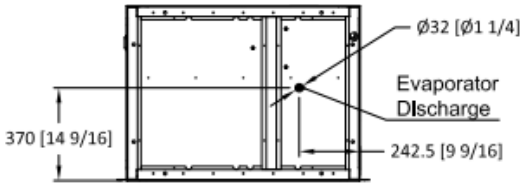

	Unit Weight	Ship Weight
lbs.	504	558
kg	229	253

DIMENSIONS

MODEL: 11V1B3

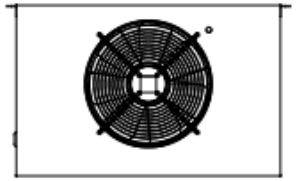

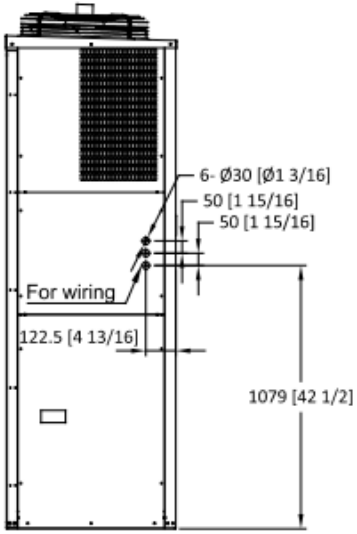

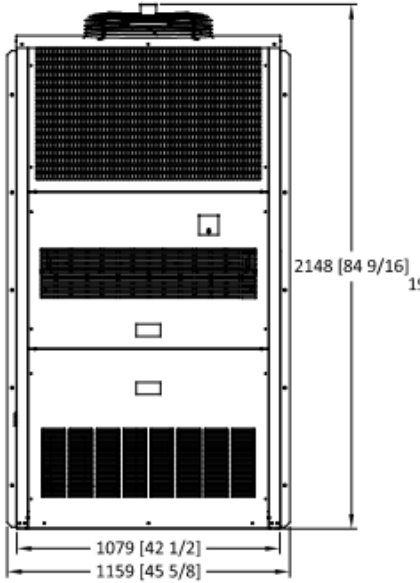

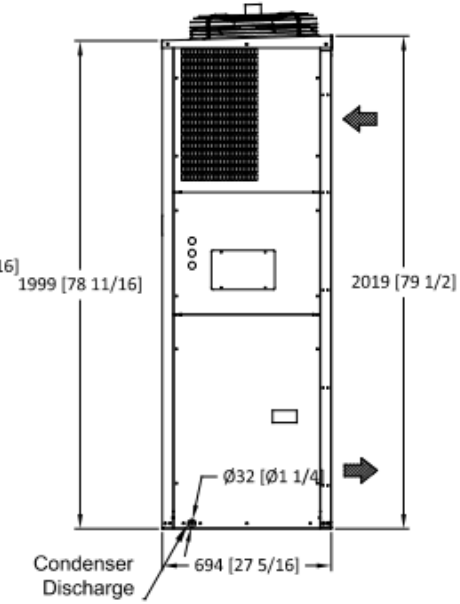

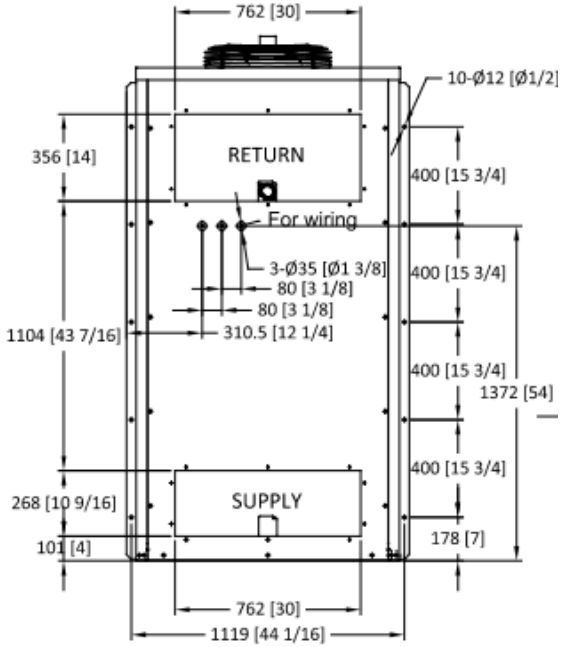

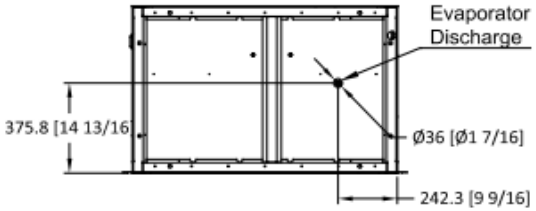

	Unit Weight	Ship Weight
lbs.	633	686
kg	287	311

DIMENSIONS

MODEL: 11V1T3

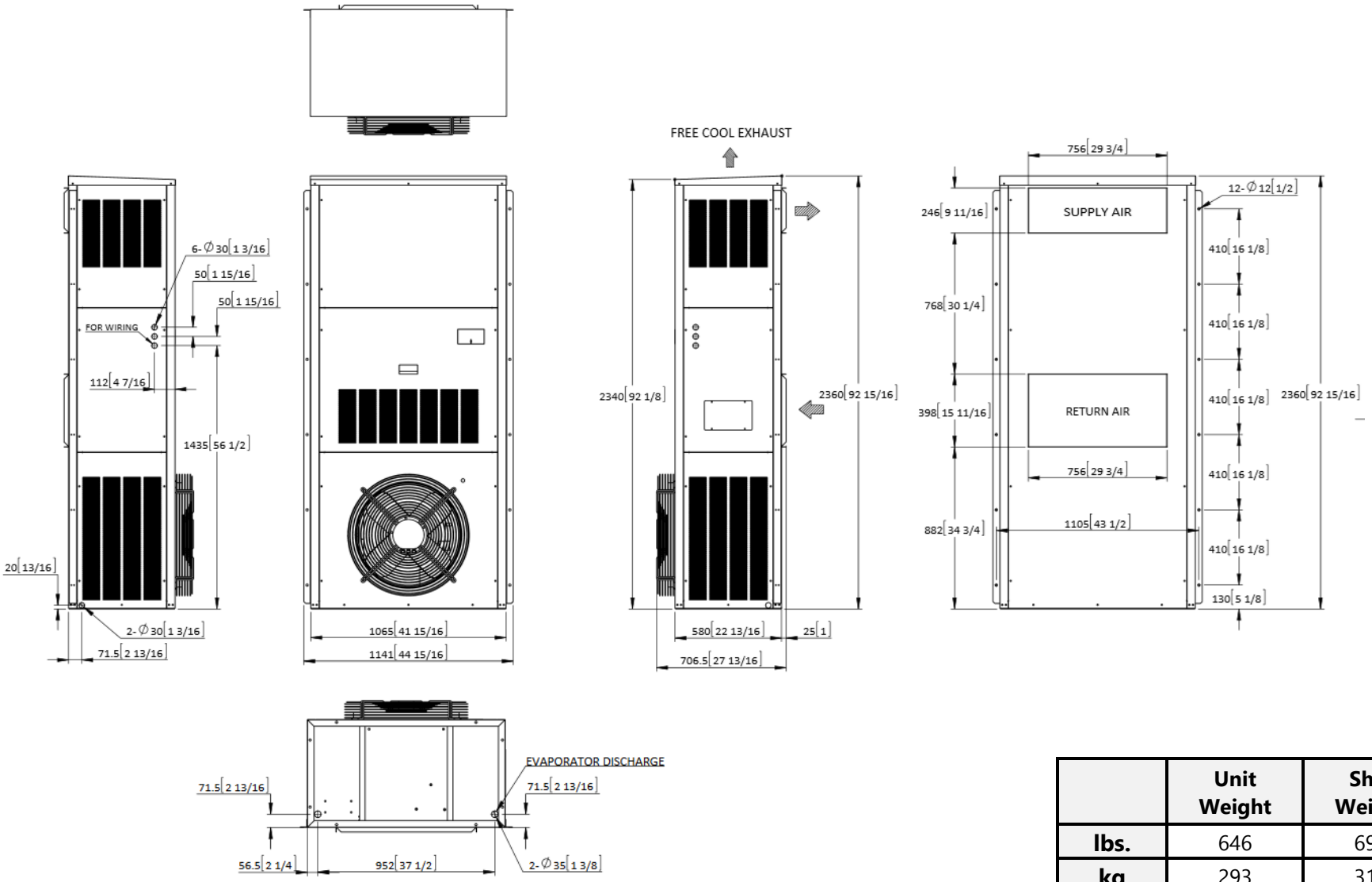

	Unit Weight	Ship Weight
lbs.	646	690
kg	293	313

DIMENSIONS

MODEL: 15V1B4

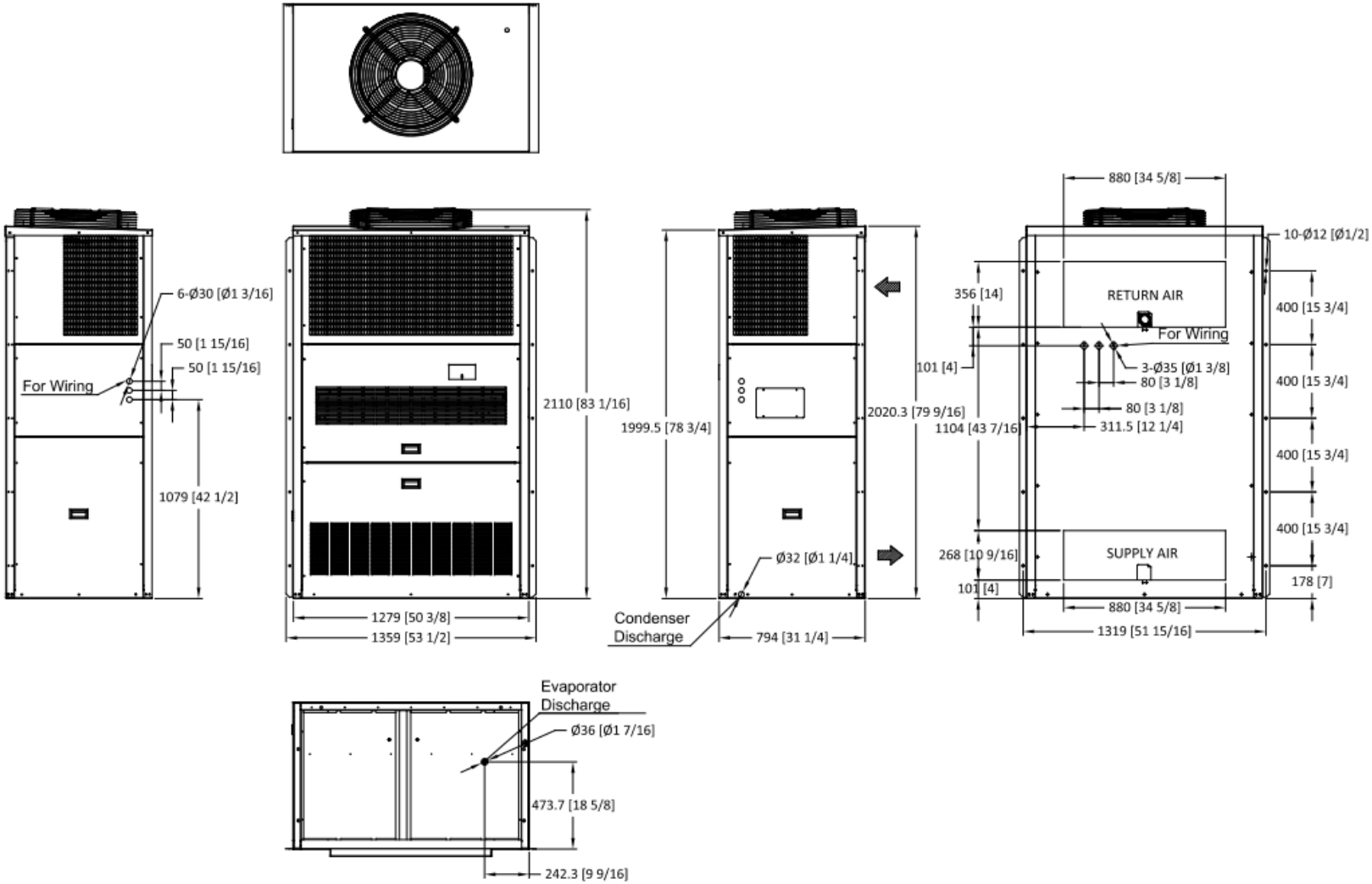

	Unit Weight	Ship Weight
lbs.	838	904
kg	380	410

DIMENSIONS

MODEL: 15V1T4

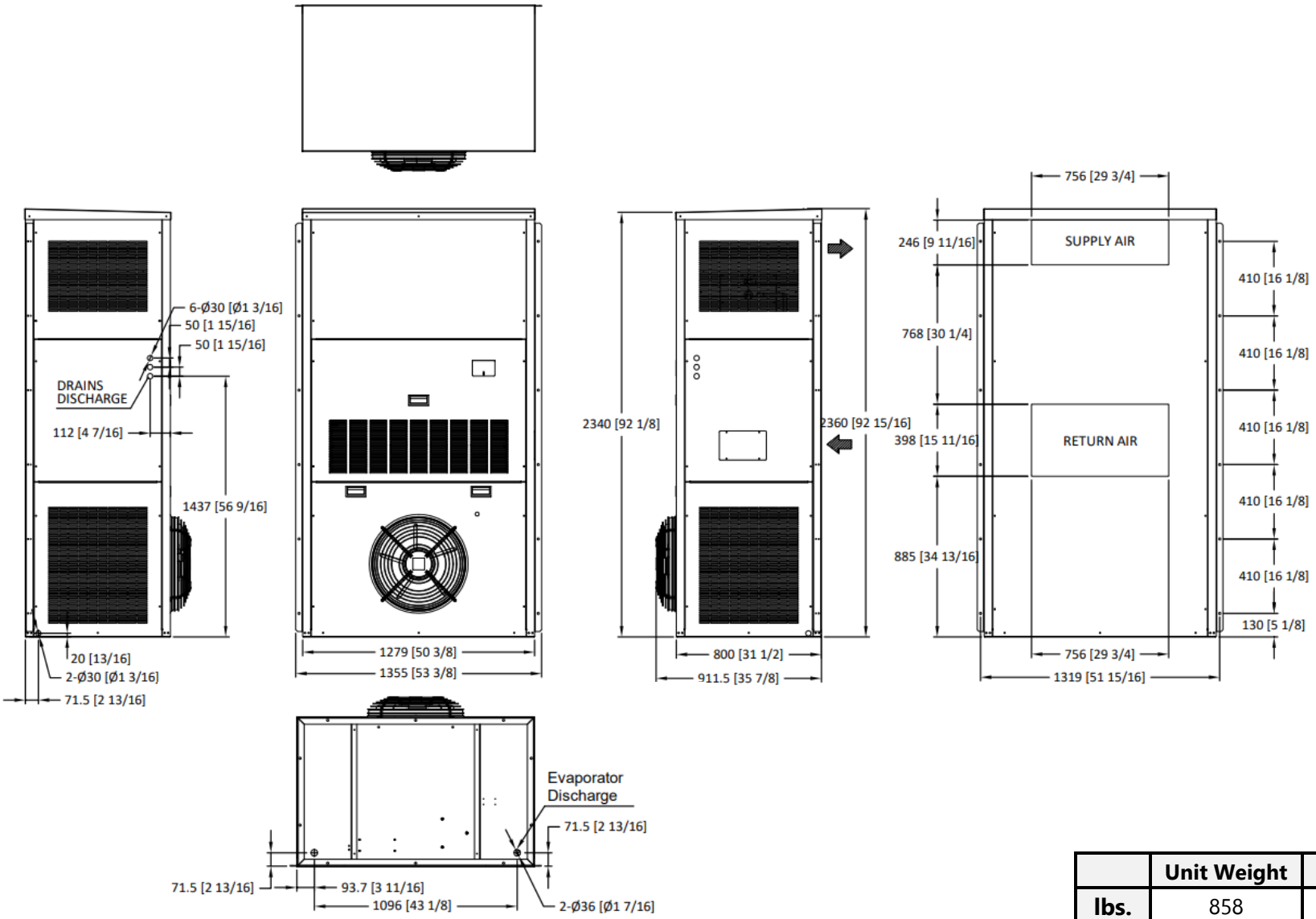

	Unit Weight	Ship Weight
lbs.	858	924
kg	390	420

DIMENSIONS

MODEL: 28V1B5/28V2B5

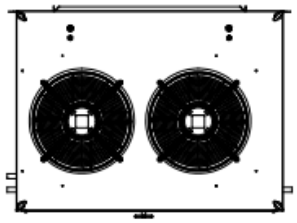

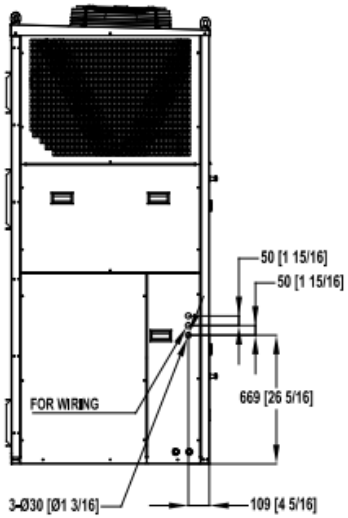

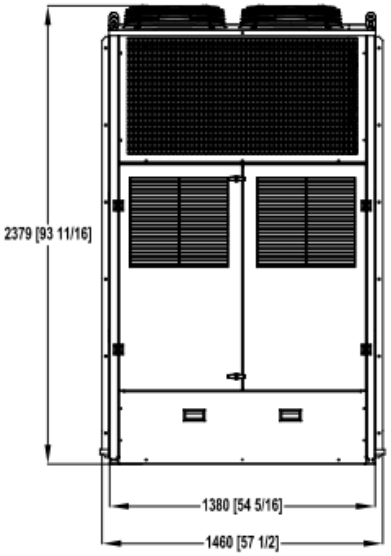

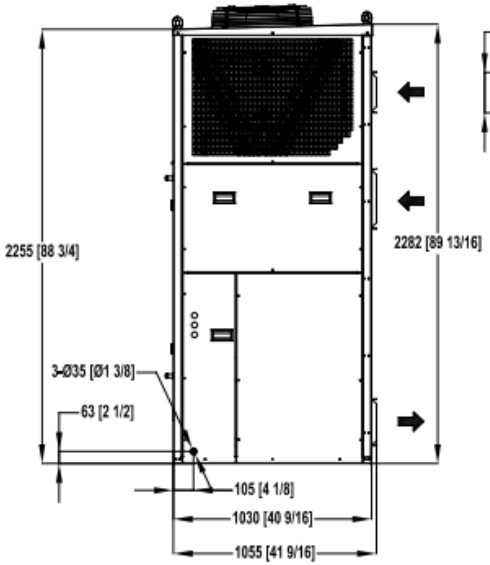

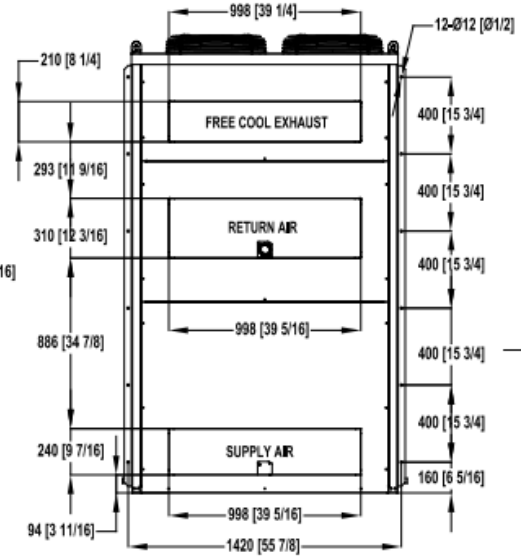

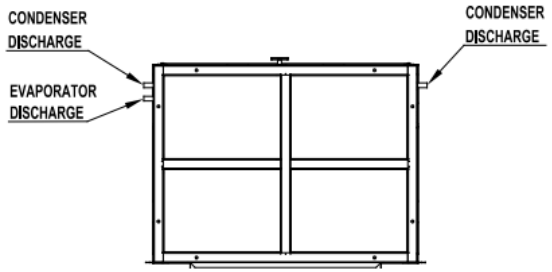

	Unit Weight		Ship Weight	
	28V1B5	28V2B5	28V1B5	28V2B5
lbs.	1300	1393	1367	1485
kg	590	632	632	674

DIMENSIONS
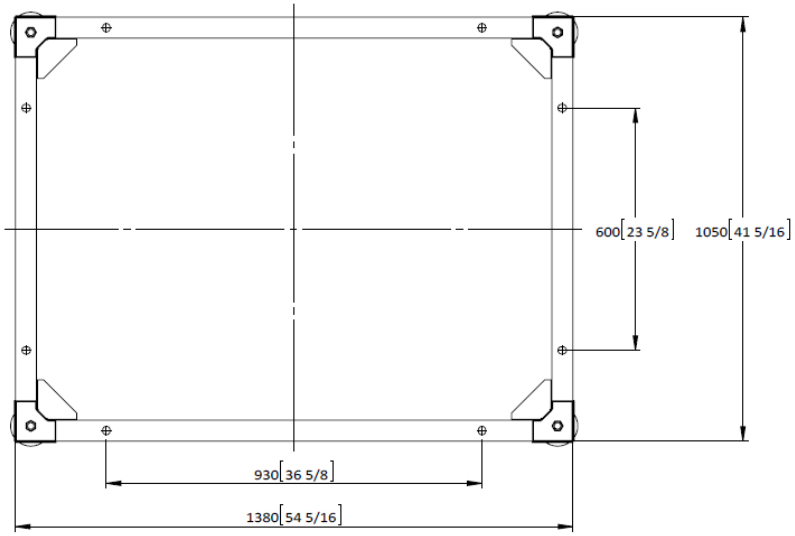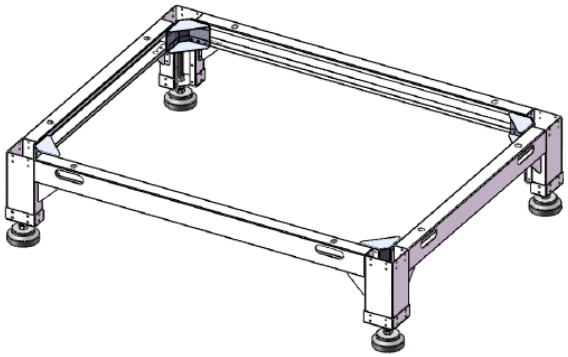
28V1B5/28V2B5 ADJUSTABLE STAND